04232021

ABS American BioTech Supply

CUTSHEET

Exterior
ABT-HC-72C-TS

Front View

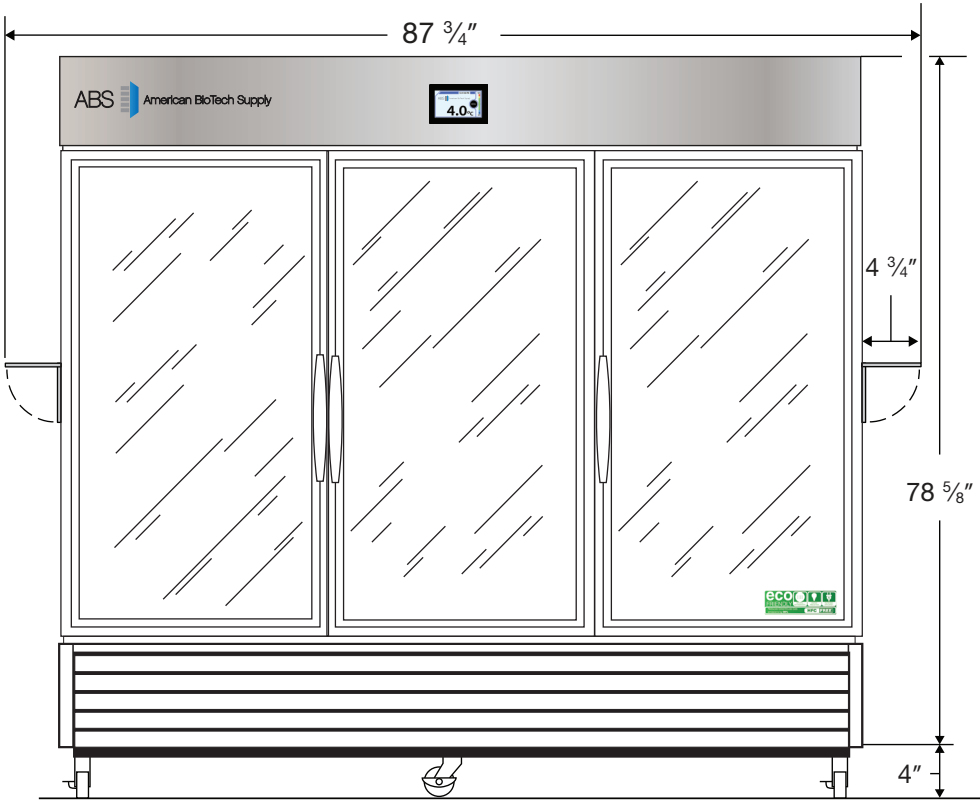

Side View

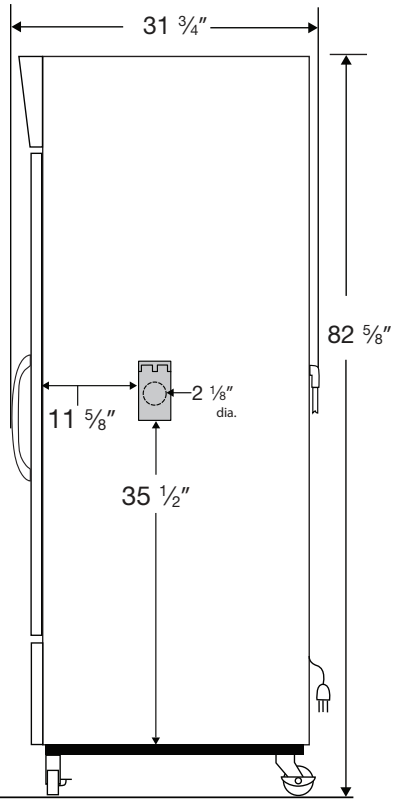

Top View

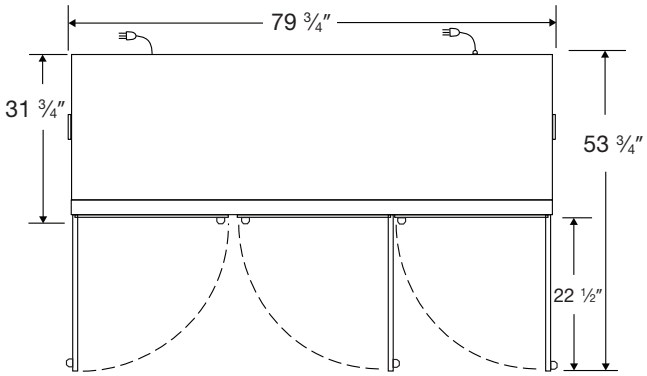

115VAC/60Hz/1PH
NEMA-5-15P

Cu. Ft	Defrost	Door	Int Door	Shelves	W″	D″	H″	Refrigerant	H.P.	Amps	Weight
72	Cycle	3 Slide	0	12 Adj	79 ¾	31 ¾	82 ⅝	R290	½	9.3	645 lbs.