Product Data Sheet
30 cu. ft. Touchpad Laboratory Refrigerator Solid Door with Natural Refrigerants

ABT-HC-30R-P

Product Description

Designed for reliable and eco-conscious laboratory storage, this 30 cu. ft. touchpad laboratory refrigerator offers versatile performance for lab environments. Its temperature control is powered by microprocessor technology, and maintains tight temperature uniformity with an adjustable operating range of 2°C to 10°C. Enjoy a user-friendly touchpad controller and a robust alarm system including audible and visual temperature alarms, door ajar alarms, sensor error alarms, and power failure alarms—all with battery backups to keep alarms running during outages. Utilizing hydrocarbon refrigerants, this unit meets EPA SNAP compliance, protecting environmental safety. It features a durable white powder-coated steel exterior, with a keyed door lock for added security. This unit offers 30 cubic feet of spacious storage and five adjustable shelves for versatile organization. With a low energy consumption and environmental benefits, the ABT-HC-30R-P is an efficient and next-level solution for diverse laboratory applications.

Images

Certifications

General Description and Application

Storage capacity (cu. ft)	30 Cu. Ft.
Door	One solid swing, right hinged; stainless steel door handle; magnetic door gasket
Shelves	Five adjustable
Mounting and Installation	Caster platform
Airflow Management	Forced draft circulation
External probe access	3/4" probe access port on rear wall
Insulation	EPA compliant high density urethane foam
Exterior materials	Powder coated steel
Access control	Keyed Door Lock
General warranty	Two (2) year parts and labor warranty
Compressor warranty	Five (5) year compressor parts warranty
Product Weight (lbs)	350
Shipping Weight (lbs)	380
Rated Amperage	3.1 Amps
Power Plug/Power Cord	NEMA 5-15P plug, 6 ft long cord
Facility Electrical Requirement	110 - 120V AC, 15A breaker, NEMA 5-15 receptacle
Agency Listing and Certification	UL listed per UL 60335-1 and UL 60335-2-89 standards; c UL listed per CSA C22.2
	No. 120 standard, Energy Star Certified

Performance

Uniformity (Cabinet air)	+/- 1.6°C
Stability (Cabinet air)	+/- 1.0°C
Maximum temperature variation (Cabinet air)	3.6 °C Total
Energy Consumption (KWh/day)	< 1.7 KWh/day
Average Heat Rejection (BTU/hr)	520 BTU/hr
Pull down time to nominal operating temp	<35 min (empty)

Refrigeration System	
Compressor	Hermetic, variable speed
Refrigerant	EPA SNAP compliant R600a Isobutane
Condenser	Static - exterior walls of cabinet
Evaporator	Fin and tube design, high efficiency fan
Defrost	Off-cycle defrost, no heat added

Controller, Configuration, Alarms and Monitoring	
Controller technology	Microprocessor temperature controller with variable frequency compressor control
Battery Backup	Temperature display and alarm only (no active cooling)
Display technology	Digital Temperature Display, Sample simulated digital temperature display; .1° Resolution
Temperature Setpoint Range Notes	Minimum temperature limited to avoid freezing
Adjustable Temperature Range	2°C to 10°C
External alarm connection	Remote alarm contacts
Alarms	Audible and visual high and low temperature alarms, Remote alarm contacts, Sensor error alarm, Power failure alarm, Resettable 1-point Min/Max History, Alarm validation (audible, visual, and remote alarm), Alarm mute with ring back
Display Probe	Product simulator bottle with glass bead media
Disclaimers	Refrigerator requires a minimum 4" of clearance around back and sides of the unit for proper ventilation (more if next to heat rejecting equipment) - improper installation will void the warranty and will lead to temperature maintenance issues, overheating and possible failure

Dimensions

	Width (in.)	Depth (in.)	Height (in.)	Door Swing (in.)	Total open Depth (in.)
Exterior	35.75''	35.5''	76.5''	30.5''	66''
Interior	32''	22.5''	65''		

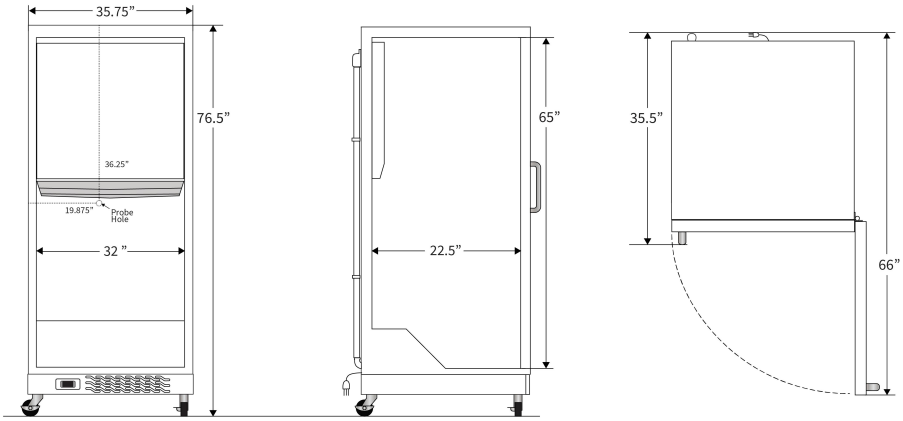

Contact		
Customer Service	800-648-4041 Option 3	customerservice@horizonscientific.com
Technical Service	800-648-4041 Option 5, Parts Option 4	technicalservice@horizonscientific.com

Rev_07232025