ABS American BioTech Supply

Product Data Sheet
47 Cu. Ft. Premier Sliding Glass Door Laboratory
Refrigerator with Variable Speed Compressor

ABT-VS-LP-47

Product Description

These premier laboratory refrigerators are engineered with variable speed technology for exceptional efficiency and performance in clinical and research environments. They feature precise microprocessor temperature control and variable speed compressor technology. Enjoy low energy consumption and natural hydrocarbon refrigerants for cost-savings and energy efficiency. Security and monitoring features include a keyed door lock and comprehensive alarms with remote alarm contacts. The cabinet is built with durable powder-coated steel, glass door transparency, safety-shielded LED lighting, and adjustable interior shelving to enhance your workflow. This model delivers optimal temperature stability and includes a 2-year parts and labor warranty with a generous 7-year warranty on the compressor. These premier refrigerators are designed to increase performance and efficiency in your lab.

Images

ABS American BioTech Supply

ABS American BioTech Supply

Certifications

INTERTEK
C ETL US

General Description and Application

Storage capacity (Cu. Ft.)	47 Cu. Ft.
Door	Two (2) sliding glass doors, self closing
Shelves	Eight (8) adjustable shelves (adjustable in 1/2" increments)
Mounting and installation	Swivel casters - locking front casters
Interior lighting	LED interior lights are safety shielded and switch controlled
Airflow management	Forced draft air circulation, patented air flow technology
External probe access	3/4" probe access port on rear wall
Insulation	Cabinet is foamed-in-place with EPA compliant high-density urethane foam
Exterior materials	White powder coated steel
Access control	Keyed door lock
General warranty	Two (2) year parts and labor warranty
Compressor warranty	Seven (7) year compressor warranty
Product weight (lbs)	448
Shipping weight (lbs)	540
Rated amperage	3 Amps
Power plug/power cord	NEMA 5-15P plug
Facility electrical requirement	110 - 120V AC, 15A breaker, NEMA 5-15 receptacle
Agency listing and certification	9¢[Σ /π9¢[ƒăűŜŘ ŎŜűŦŜŘ ű2 ¦ [птм ăűI·yŘI·Ř a ŜŜűă 2 ŜȅŎŜŜŘă 9yŜ∃è {űI· Øнл Ŧ2 [I·ō2I·ű2è wŜŦ∃ŜI·ű2ă hŦŦŎI·f ƒăűy∃ Y I·è ōŜ Ŧ2ǳyŘ I·ű ǿǿǿŜyŜ∃èăűI·∃2Ø

Performance

Maximum temperature variation (cabinet air)	+/- 2.0° C
Stability (simulator ballast)	+/- 0.4° C
Adjustable temperature range	2° C to 15° C
Energy consumption (KWh/day)	<2.6 KWh/day *meets ENERGY STAR® v2.0 for Laboratory Refrigerators
Average heat rejection (BTU/hr)	<670 BTU/h
Noise pressure level (dBA)	40 dBA or less installed
Pull down time to nominal operating temp	< 45 min (empty)
Performance note	Max temperature variation based on an empty chamber at steady state using 15 bare (unweighted) thermocouple probes. Product loading, door openings, and ambient conditions will affect performance. Stability of simulator ballast based on bottle probe provided with the unit located center of empty chamber at steady state, no door openings

Refrigeration System	
Compressor	Hermetic, variable speed
Refrigerant	EPA SNAP compliant R600a Isobutane (Hydrocarbon natural refrigerant)
Condenser	Tube and grid, high efficiency fan forced air
Evaporator	Fin and tube, high efficiency fan forced air
Defrost	Cycle Defrost

Controller, Configuration, Alarms and Monitoring	
Controller technology	Microprocessor temperature controller with variable frequency compressor control
Battery backup	For controller temperature display and alarms only, no cooling active
Display technology	Non-applicable
Digital communication	Non-applicable
External alarm connection	Remote alarm contacts
5ʎăLJfl·è pꟿƻōŜ	tꟿƻŘdzŎű ăʎϒdzfl·űƻꟿ ōƻűűfŜ øʎűK Ǝfl·ăă ōŜl·Ř ϒŜŘʎl·
Alarms	Audible and visual high/low temperature alarms, remote alarm contacts, sensor error alarm, power failure alarm, door ajar alarm, and alarm mute
Disclaimers	Refrigerator requires a minimum 2" of clearance around back and sides of the unit for proper ventilation (more if next to heat rejecting equipment) - improper installation will void the warranty and will lead to temperature maintenance issues, overheating and possible failure.

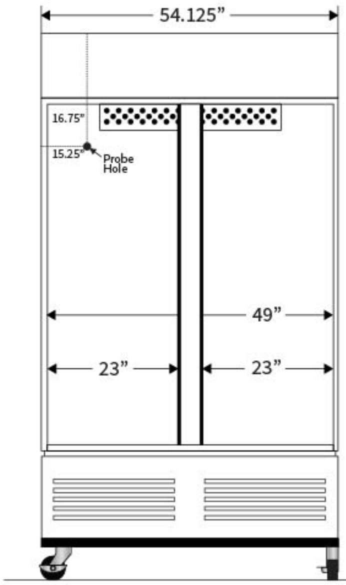

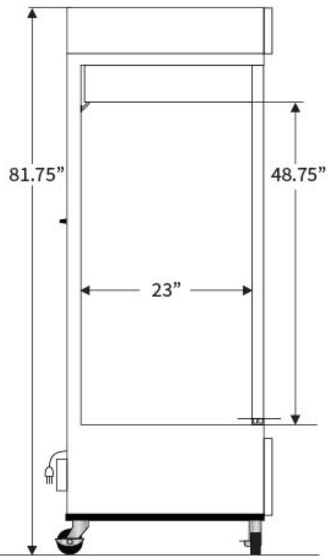

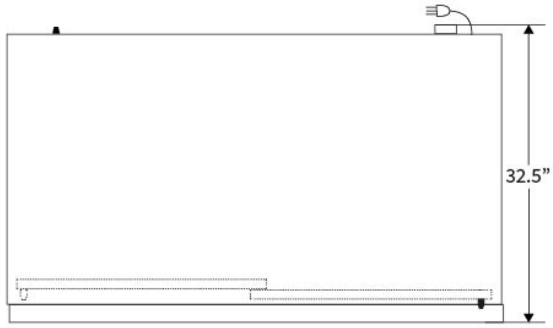

Contact		
Customer Service	800-648-4041 Option 3	customerservice@horizonscientific.com
Technical Service	800-648-4041 Option 5, Parts Option 4	technicalservice@horizonscientific.com

Rev_05.29.26