30 Cu Ft LABORATORY FREEZER/DUAL TEMPERATURE

OWNERS' MANUAL

Disclaimer

This manual is intended as a resource to provide the operator with instructions on the proper use and maintenance of particular Horizon Scientific, Inc. products.

Failure to adhere to the instructions as herein could result in improper product operation, injury, and potentially void product warranties Horizon Scientific, Inc. accepts no liability or responsibility for results stemming from improper use or maintenance of its products.

The content within this guide is provided for illustrative purposes only and may vary from the actual hardware or software photos, screen shots or illustrations.

Horizon Scientific, Inc.
125 Varnfield Drive
Summerville, SC 29483

www.horizonscientific.com

TABLE OF CONTENTS

1. GENERAL 4

1.1 INTENDED AUDIENCE 4
1.2 APPLICATION 4
1.3 SAFETY AND NOTICES 4
1.4 RECEIVING AND SHIPPING DAMAGE HANDLING 8

2. INSTALLATION 9

2.1 UNPACKING 9
2.2 GENERAL RECOMMENDATIONS 9
2.3 LOCATION AND FUNCTIONAL INSPECTION 10
2.4 LEVELING 11
2.5 DOOR ALIGNMENT 11
2.6 SHELVES 11
2.7 ELECTRICAL COMPONENTS 13
2.8 ELECTRICAL INSTALLATION 13
2.9 TEMPERATURE PROBES 14
2.10 EXTERNAL PROBE ACCESS PORT 14
2.11 BATTERY BACKUP (OPTIONAL) 14
2.12 EMERGENCY BACKUP PLAN 14
2.13 INITIAL POWER UP AND OPERATION 15

3. CONTROLLER / DISPLAY 15

3.1 OVERVIEW 15
3.2 OPERATING THE CONTROLLER 16
3.5 CALIBRATION, VERIFICATION, AND VALIDATION 27
3.6 ALARM FUNCTIONALITY 27

4. PRODUCT SPECIFICATIONS 28

4.1 OPERATING STANDARDS 28

5. MAINTENANCE 28

5.1 INSPECTION AND SERVICING 28
5.2 SERVICE AND ANALYSIS GUIDE 33

6. WARRANTY 34

6.1 FACTORY WARRANTY 34
6.2 COMPRESSOR WARRANTY 34
6.3 ADDITIONAL WARRANTY INFORMATION 34
6.4 WARRANTY CLAIMS 35
7.1 SAFETY 37
7.2 ENVIRONMENTAL 37

1. GENERAL

1.1 INTENDED AUDIENCE

This manual is intended for authorized service technicians and end users. The information herein pertains only to the specifically indicated products.

1.2 APPLICATION

This manual applies to 30 Cu Ft Laboratory Freezers and Dual temperature units, which may be provided with or without optional equipment, such as various display interfaces, casters, etc. Optional equipment will be noted in the appropriate section of this manual.

This manual does NOT apply to the following:

- Flammable Storage Freezers
- Hazardous Location Freezers

1.3 SAFETY AND NOTICES

Symbols found in this manual

This is a general warning, caution, hazard, or important consideration symbol.

This is an electrical hazard caution / warning symbol.

This is a hot surface hazard caution / warning symbol.

This is a flammable hazard caution / warning symbol.

This is a pinch or potential injury hazard caution / warning symbol.

Warnings, cautions, and important considerations

WARNING: This product can expose you to chemicals including chromium which is known to the State of California to cause cancer and birth defects or other reproductive harm. For more information, go to www.P65Warnings.ca.gov

WARNING: Electric Shock Hazard. Do Not Remove top electrical cover. Contact a qualified service representative.

WARNING: Do not remove electrical system components access unless instructed to do so.

WARNING: Do not modify the refrigeration circuit, electrical wiring or components, unless work is performed by a certified technician.

WARNING: Do not damage the refrigeration circuit. Flammable refrigerants used in this equipment may not contain an odor. Do not pierce or burn.

WARNING: Only use manufacturing supplied power cord, never use an extension cord.

WARNING: The controller automatically switches power to components. Always unplug before making repairs.

WARNING: Do not use electrical appliances inside the storage compartments of this appliance, unless they are of the type recommended by the manufacturer.

WARNING: Do not overload shelves with heavy products or concentrated loads, this increases the likelihood of items falling and causing injury.

WARNING: Do not store any unsealed chemical material in this cabinet. Corrosive fumes from chemical material can linger inside of the chamber and cause serious damage to the refrigeration coils. Storing unsealed chemical material in this equipment will void the factory product warranty.

WARNING: Do not store explosive substances such as aerosol cans with flammable propellant in this cabinet. Do not store flammable substances such as gasoline in this cabinet. This equipment is not rated for flammable material storage.

WARNING: Do not operate this equipment in the presence of explosive fumes. This equipment is not rated as a hazardous locations storage cabinet.

WARNING: Keep ventilation openings clear of obstruction. This includes ventilation inside the appliance enclosure or in the built-in structure.

CAUTION: Before moving the unit, make sure the door is closed, casters (if installed) are unlocked and free of obstructions, and disconnect the power cord (make sure cord is secured).

CAUTION: Exterior walls of the equipment may be hot. Provide adequate clearance for heat dissipation.

CAUTION: Do not use mechanical devices or other means to accelerate the defrosting process, other than those recommended by the manufacturer.

CAUTION: Avoid any sharp edges or points when working on or in the unit.

CAUTION: Keep fingers out of pinch point areas; clearances between the doors and between the doors and cabinet are necessarily small; be careful closing doors.

IMPORTANT: Only use manufacturer supplied or approved components and authorized personnel, when servicing the unit.

IMPORTANT: This unit must be properly installed and located in accordance with the Safety Standard for Refrigeration Systems, ANSI/ASHRAE 15, and with these installation instructions before use.

IMPORTANT: This unit must be decontaminated prior to sending for repair or service. Contact Horizon Scientific or your distributor for decontamination instructions.

Specific to hydrocarbon refrigerants:

Refrigerant class per ANSI/ASHRAE 34

- **DANGER:** Risk of fire or explosion, flammable refrigerant used. Do not use mechanical devices to defrost the unit. Do not puncture refrigerant tubing.
- **DANGER**: Risk of fire or explosion, flammable refrigerant used. To be repaired only by trained service personnel. Do not puncture refrigerant tubing.
- **CAUTION:** Risk of fire or explosion, flammable refrigerant used. Consult instruction manual/ repair manual/ owner's guide before attempting to service this product. All safety precautions must be followed.
- **CAUTION:** Risk of fire or explosion, flammable refrigerant used. Dispose of properly in accordance with federal or local regulations.
- **CAUTION:** Risk of fire or explosion, flammable refrigerant used. Do not puncture refrigerant tubing; follow handling instructions carefully.

1.4 RECEIVING AND SHIPPING DAMAGE HANDLING

Each unit is carefully inspected to meet our high quality standards before it ships to you. Unfortunately, shipping damage can happen during transportation to you. There are two general types of shipping damage. The first is visible damage. This type of damage includes visible loss, damage, shortage or any external evidence of loss or damage that is visible at the time of delivery. This type of damage must be noted in detail on your delivery receipt. Make sure the driver signs and dates the delivery receipt, acknowledging the damages. We also recommend taking many pictures to demonstrate and document the damaged area(s). This must happen at the time of delivery. Keep a copy for your records and send another to the carrier's damage claims department along with a formal request for an inspection report. Follow up with a phone call. Their contact information can be found on the carrier's web site.

The second type of shipping damage is concealed damage. This type of damage will probably not be apparent at time of delivery and may not be discovered until unpacking and inspecting the unit. Remember, time is of the essence. You should unpack and inspect the unit as soon as possible. Each day that passes reduces the likelihood that the carrier will pay the claim. As soon as the concealed damage is discovered, stop unpacking and retain all packing materials. Take many pictures to demonstrate and document the concealed damage area(s). Contact the carrier by phone to report the claim. Note the date and time and person you spoke with. Get a claim number. Follow up with a written letter referencing the claim number and including a formal request for an inspection. Again, consult the carrier's website for specific claim instructions and follow them precisely.

AS STATED ABOVE, THE CARRIER IS YOUR SOLE SOURCE FOR SATISFACTION OF A DAMAGE CLAIM. UNDER NO CIRCUMSTANCES SHOULD THE MERCHANDISE BE RETURNED TO THE MANUFACTURER. NO RETURNS WILL BE ACCEPTED WITHOUT PRIOR AUTHORIZATION.

2. INSTALLATION

2.1 UNPACKING

- Remove outer stretch wrap and cardboard packaging for unobstructed access under the unit.
- Unbolt the cabinet from the pallet using a 14mm (9/16”) wrench or socket to remove the 4 bolts in opposite corners of the unit.
- A fork truck or pallet jack is *recommended* to remove the unit from the pallet.
  - When using a fork truck, place forks under the unit from the front or rear of the unit. Forks should be set as wide as possible for stability. DO NOT place forks in the center of the unit to avoid tip over.
  - When using a pallet jack, center the forks directly in front or back of the unit. Lift forks to the same height as the top runners supporting the unit.
  - Slide unit straight forward or backward until it is completely supported by the pallet jack.
- Install the leveling feet (or optional casters)
  - With the unit supported by a fork truck or pallet jack, lift unit slightly to provide easy access to the 4 mounting locations on the bottom of the unit near the outside corners.
  - For leveling feet, locate the (4) ½” threaded inserts and thread each foot completely into place until it stops.
  - For casters, slide the top plate of each caster into the clip until the retainer clicks over the edge, securely locking the caster to the clip. Give the caster a slight pull to ensure it is secure.
- Alternately, if fork truck or pallet jack is unavailable, carefully rotate the unit so it is 45° to the pallet, with a corner of the pallet centered at the front of the unit. Pull the unit forward to expose the front leveling leg or caster mounting locations. Install the front legs or casters, then pull unit forward keeping the rear of the unit supported by the pallet, until the rear legs or casters can be installed. Then carefully remove the unit from the pallet.
- Remove foam/cardboard shipping supports from the inside of the chamber prior to powering on unit. Make sure to do this after the unit is set in place to prevent damage.

2.2 GENERAL RECOMMENDATIONS

- After unpackaging, allow the unit to come to room temperature before starting.
- On startup, the high temperature alarm may sound until the unit is able to cool the interior to operating range.
- Allow for the set point to be reached and for the unit to stabilize before storing products.
- Do not overload the unit.
- Only store items on the shelves. Products on the floor, against walls, or against the door(s) may obstruct air flow and impair the performance of the unit.

2.3 LOCATION AND FUNCTIONAL INSPECTION

Ambient conditions:
The refrigerator is meant to be installed indoors, and operates best in climate-controlled, +18°C to +26°C (+65°F to +78°F), <70% RH, to ensure efficiency and strong thermal performance. Some ambient state excursions are acceptable, but performance may be impacted if used in other environmental conditions. Please refer to the Product Specifications section of this manual for guidance.

While the refrigerator will operate in a wide range of conditions, the following considerations may help to reduce the chance of an undesirable condition. Units placed near room doors, HVAC registers, or widows will be subject to more ambient temperature variation. Direct sunlight or other powered equipment in the room will raise localized temperatures differently than what is registered by an HVAC thermostat. Air currents in a room from building ventilation, windows, or doorways will impact the quality and amount of air exchange between the refrigerated chamber and the ambient during door openings.

Clearance Space:
This model requires a minimum of four (4) inches of clearance space above, behind, and on both sides of the unit. This will allow good airflow and access to the unit for periodic maintenance, or service. Ensure that there is enough clearance to allow the door to open more than 90 degrees without obstruction.

The cabinet must be located within reach of an outlet that has an appropriate power supply as listed above with a protective earth ground. The outlet should be easily accessible when installation is complete as this is the only method for powering off the equipment.

2.4 LEVELING

Leveling

Ensure that the placement chosen for installation has a level floor. The unit must be level side to side and front to back. If the unit is not level, leveling legs can be adjusted by spinning each leg to extend or retract to the correct length.

IMPORTANT: If the unit is not level, door closure may be negatively impacted.

2.5 DOOR ALIGNMENT

Verify that the door is level and opens and closes easily. Verify that the door gasket seals along all surfaces of the cabinet. Improper sealing will affect the ability to maintain temperature over time and may lead to excessive condensation in refrigerator units. If adjustment is needed, contact technical service.

2.6 SHELVES

The freezer chamber comes equipped with fixed evaporator shelves. Shelf loading should not exceed 50 lbs. per shelf evenly distributed.

The refrigerator chamber, present only on dual temperature units comes equipped with adjustable wire shelves. Pilasters are factory installed and allow user to select spacing between each shelf. Shelf loading should not exceed 50 lbs per shelf evenly distributed.

IMPORTANT: For shelves to remain level and strong; it is critical that the shelf clips are properly installed and locked securely into position.

CAUTION: The shelf clip(s) present pinch points when assembling and disassembling.

WARNING: Do not use pliers or any crimping tools when installing shelf clips. Altering shelf clips in any way can lead to shelving instability.

Shelf Installation and Repositioning

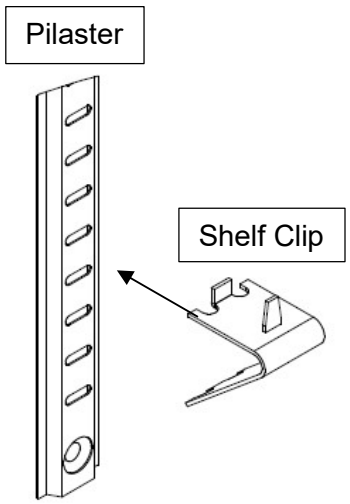

1. Locate shelf clips delivered in a plastic bag with the unit.
2. Start at the bottom in terms of shelf installation and work your way up.
3. Properly insert the shelf clips in the desired height (Remember all shelf clips will need to be installed at the same height to keep the shelf level.)
4. Always lay the back of each shelf down on the rear clips before the front.
5. The Bottom tab of the shelf clip will fit tightly. You may need to squeeze or twist the bottom of the shelf clip to install.
6. After installation, the shelf clip will fit snug into the shelf standard. The shelf clip should not be loose or able to wiggle out of the shelf standard.
7. When placing the shelves on the shelf clips ensure the shelf is pushed back as far as it can go to ensure proper temperatures across the entire shelf.

2.7 ELECTRICAL COMPONENTS

Remote Alarms Contact Terminal Block

A remote alarm contact terminal block is provided to allow for connection to a building monitoring system. The terminal block is located at the back of the cabinet near the bottom of the unit.

For units with a temperature controller only (no optional display), there will be 3 wires: Normally Open (NO), Common (C), and Normally Closed (NC). Connecting to NC and C will provide a signal to the monitor during normal operation, then interrupt when an alarm condition exists (including when power is lost). Connecting to NO and C will have no signal to the monitor during normal operation, then provide signal when an alarm exists.

For units with a touchscreen display, see section 3.3 for an explanation of the terminal block connections, which include NC and C connections for alarm monitoring, and a 4-20mA connection for remote temperature monitoring.

For units with a pushbutton display, see section 3.3 for an explanation of the terminal block connections, which include NC and C connections for alarm monitoring, and a 4-20mA connection for remote temperature monitoring.

2.8 ELECTRICAL INSTALLATION

Check the proposed external power outlet/supply to be used to ensure that the voltage, phase, and current carrying capacity of the circuit from the electrical panel correspond to the requirements of the cabinet.

The supply circuit to this cabinet must conform to NEC (National Electrical Code). Consult the cabinet Serial-Data plate for voltage, cycle, phase, and amperage requirements before making connection.

Supply voltage should not vary more than 10% from the serial plate ratings.

DO NOT connect this equipment to a GFI (Ground Fault Interrupt) circuit.

Do not use an extension cord or any multi-outlet strip or plug. Using such devices can lead to insufficient power and component failure, such as the compressor or starting components.

If the power cord is damaged, it should be replaced immediately by an authorized service technician.

Be sure your unit is properly grounded. Use the 3-prong plug provided into a 3-prong grounded outlet. Unless the above grounding method is followed, you are not protected against severe or lethal shock in the event of a short circuit of an electrical component or wiring of the unit.

2.9 TEMPERATURE PROBES

A primary temperature monitoring probe is imbedded in a bottle containing a glass bead thermal media. The thermal media is designed to simulate the temperature of stored product during normal operation. The bottle ships clipped to the side wall of the equipment. It is recommended to place this bottle in the center of the center shelf to more accurately represent temperatures where product is stored.

Verify that the metal temperature probe is fully inserted into the bottle and that the cap is completely closed to avoid spilling any thermal media. Failure to maintain a full probe bottle may cause the display to report temperatures that do not represent the stored product temperature accurately.

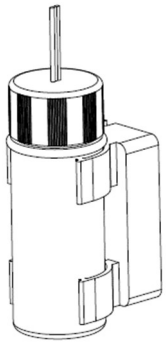

Bottle Probe

2.10 EXTERNAL PROBE ACCESS PORT

This unit is equipped with a ¾" (19 mm) port that can be used for external monitoring devices. This port is located on the back of the unit. Remove the external and internal plugs in the port for routing. Seal the probe port hole around wiring with duct seal or moldable putty to prevent air from getting into the chamber. Do not route wires through the door gasket, which compromises the integrity of the door seal.

2.11 BATTERY BACKUP (OPTIONAL)

Depending on the version of refrigerator, the display and controller may include a battery backup feature that allows the controller and display to maintain temperature monitoring and alarms even if the main power is lost. The battery backup does not require any activation on setup, and will automatically disconnect the battery power as battery voltage drops to maintain component longevity.

NOTE: The unit cannot cool without main power, but the controller will continue to display and alarm until the battery backup is discharged.

2.12 EMERGENCY BACKUP PLAN

Before using this refrigerator, establish an emergency backup plan in case of power outage or other possible unseen issue:

- How will equipment be monitored?
    a. Onboard audible and visual alarms notify personnel in the vicinity. Alarm setpoints should be

verified prior to storing products in the refrigerator.

b. Alarm conditions may be monitored remotely by connecting the remote alarm contacts to a building monitor or remote dialer. Test at startup and at regular intervals to verify operation.
c. Remote temperature monitoring is recommended. Touchscreen displays include a 4-20mA output that can be used for remote temperature monitoring. Otherwise, 3rd party temperature monitoring probes should be installed via the probe access port.

- What is the contingency to keep product cold?
  a. External power backups or power generators must be sized appropriately for refrigerator equipment. Compressor motors draw maximum power momentarily when the cooling cycle starts.
  b. Extra cold storage equipment or temporary storage method (i.e. coolers and ice packs) if the refrigerator has unexpected issues.

IF YOU PLAN TO STORE IRREPLACEABLE AND/OR HIGH VALUE PRODUCTS IN THIS UNIT TAKE THE PROPER PRECAUTIONS NOW.

The manufacturer's sole obligation under this warranty is limited to either repair or replacement of parts, subject to the additional limitations below. This warranty neither assumes, nor authorizes any person to assume obligations other than those expressly covered by this warranty.

NO CONSEQUENTIAL DAMAGES. The manufacturer is not responsible for economic loss, profit loss, or special indirect or consequential damages, including without limitation, losses, or damages arising from contents spoilage claims whether or not on account of refrigeration or mechanical failure.

2.13 INITIAL POWER UP AND OPERATION

Once all elements of the installation and any on-site IQ (Installation Qualification) have been completed, your unit is ready for startup. Simply plug in the unit into a grounded outlet that meets the electrical requirements, and the unit will automatically start the cooling operation. The main controller, which is located below the door on the front of the unit, is factory set.

The controller (or optional displays, if equipped) may display a high temperature alarm while the equipment is cooling to the operational temperature range. Alarms can be muted to silence the audible alarm and will automatically clear once operating temperature is reached.

3. CONTROLLER / DISPLAY

3.1 OVERVIEW

This equipment comes equipped with a digital microprocessor temperature controller for managing the cooling functions. During normal operation, the compressor will turn on and off to maintain the cold temperature in the storage chamber. The temperature controller utilizes a dedicated NTC temperature probe that reacts quickly to changes in chamber temperature to manage cooling.

The system utilizes a bottle probe, described in section 2 of this manual, to simulate the actual temperature experienced by product. If an optional display is not installed, the LCD of the temperature controller reflects the

temperature of this bottle probe. If an optional display is installed, the optional display will indicate the bottle probe temperature and the temperature controller will be hidden.

Optional displays monitor temperature (in °C or °F), manage alarms, and provide other feedback based on the various features available, but these displays do not impact the cooling function managed by the temperature controller.

3.2 OPERATING THE CONTROLLER

Please Note: The digital temperature controller has been factory set and tested to allow your unit to operate at its desired temperature cycle.

Adjusting the settings on the controller will alter factory settings. WE STRONGLY RECOMMEND YOU CONTACT THE MANUFACTURER'S TECHNICAL SUPPORT DEPARTMENT BEFORE MAKING ANY ADJUSTMENTS TO THIS CONTROLLER. TECH SUPPORT PHONE NUMBER IS (800) 648 4041, SELECT OPTION 5 FOR TECHNICAL SEVICE.

For the temperature controller, the point where the compressor turns off is called "SET POINT". The point where the compressor turns on is calculated by adding the value of "SET POINT" and "Hy" (temp differential).

For example, if you wish to maintain the operation temperature between 4°C and 6°C, "SET" = 4°C, and "Hy" = 2°C.

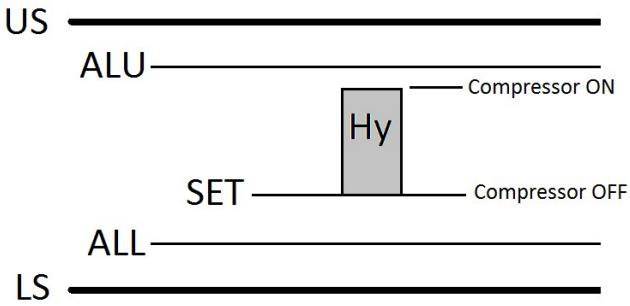

View the set point
Press and release [SET] button. The display will show the current set point value.

Change the set point (compressor turn-off point)
Press and hold [SET] until °C or °F icon blinking. Press [UP] or [DOWN] to change the setting value. Then, press [SET] once to confirm the new setting.

Other parameters available

CODE	DESCRIPTION	Application
HY	Temp differential between compressor start and off point	**All models**
OT	Air (control) probe calibration	**All models**
ALU	High temp alarm point	**No optional display installed**
ALL	Low temp alarm point	**No optional display installed**
O3	Bottle (display) probe calibration	**No optional display installed**

View or Change the other parameters

Press and hold both [SET] and [DOWN] at the same time until “Hy” appears on the display.

Press [UP] or [DOWN] to scroll through parameters. Press [SET] to enter the current setting. Press [UP] or [DOWN] to change value. Press [SET] once to confirm the new setting. The display will show the next setting.

At any setting, press and hold both [SET] and [UP] to exit out the setting mode, or simply leave the display alone for 10 seconds.

ALARMS

For models without an optional display installed, the following alarms will be indicated by the controller during abnormal conditions. When an optional display is installed, that display will indicate alarms.

CODE	MEANING	DESCRIPTION
HA	High Temperature alarm	Bottle probe temperature is above the ALU setting for alarm delay duration (default 0 minutes)
LA	Low Temperature alarm	Bottle probe temperature is below the ALL setting for alarm delay duration (default 0 minutes)
P1 (P#)	Probe Failure alarm	Probe is faulty or disconnected. Number corresponds to the affected probe.
DA*	Door Ajar alarm *(if equipped)	Door is open for the door alarm delay duration (default 60 seconds)
CA*	Power Loss alarm *(if equipped)	Loss of main power to the unit – cooling is disabled

3.3 OPTIONAL TOUCHSCREEN DISPLAY

INTRODUCTION

The Touch Screen display and alarm system is designed to display the refrigerator's interior sample temperature, and give alarms if an error occurs. In addition, the system logs the temp readout every 60 seconds and stores up to 1 year of data. Once the data is full, the newest data overwrites the oldest data.

FEATURES

- Sample temperature display
- Decimal temperature readout
- Battery backup for power failure
- Single point HI and LO temp histc
- Temperature calibration (offset)
- °C/°F readout switch
- Real world time clock display
- Temp chart (24 hours)
- Visual temp scale bar
- Tech support info (QR code)
- Password protection
- Data logging
- Data download (via USB cable)
- Visual Alarm
- Audible Alarm
- Remote Alarm
- High temp alarm
- Low temp alarm
- Power failure alarm
- Sensor error alarm
- Low battery alarm
- Audible alarm volume
- Audible alarm ring back
- Door alarm
- 4-20mA output
- Alarm validation

IMPORTANT: DO NOT use any sharp or pointed object to operate the touch screen. To clean the screen, only use lens cleaning wipes or microfiber cloth. Any scratch to the screen is not covered under warranty.

MAIN SCREEN

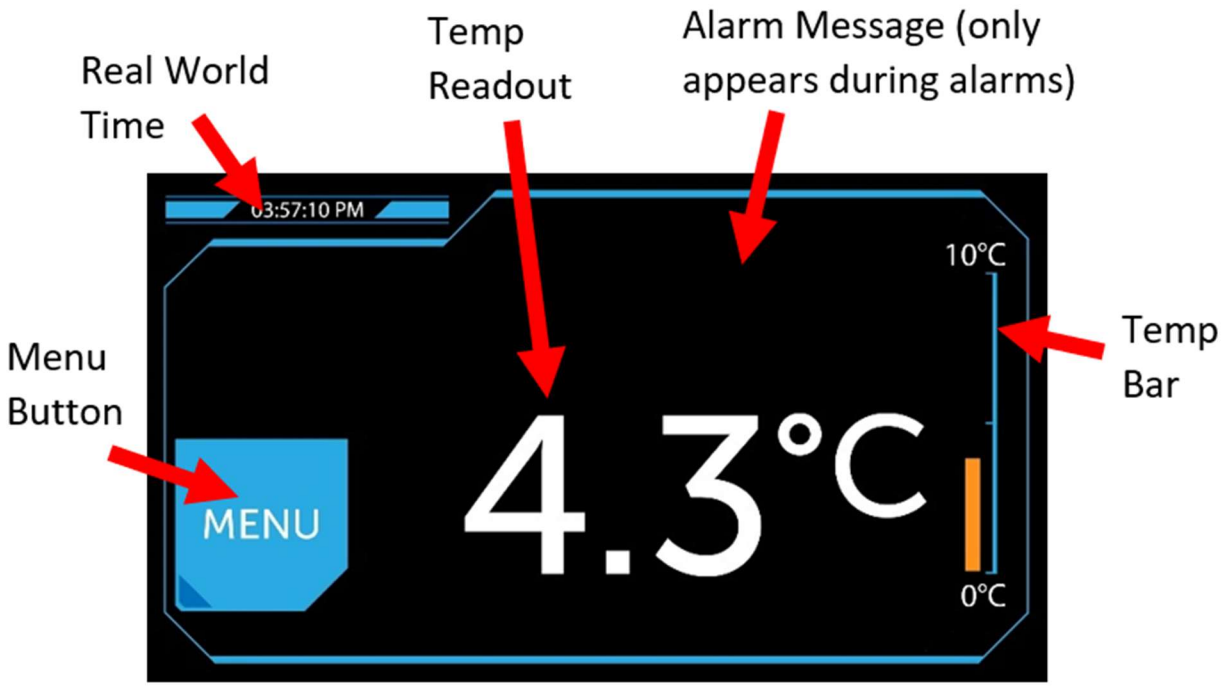

*Your touch screen display layout may look slightly different from the illustration above, but the information is the same.

BATTERY BACKUP & POWER FAILURE ALARM

The Touch Screen display alarm system uses a rechargeable battery. During a power failure the batteries will support the data logging, the alarm system, and the temperature display for 8 hours. When the power resumes, the batteries will be automatically recharged, and the display will return to the normal operation.

During a power failure event, the visual display will display "power failure" message, and will instruct to check the main power source. Audible alarm & remote alarm contact would be activated to alert users. The Touch Screen display will still display and log the refrigerator temperature during a power failure event until the battery power is depleted.

MENU

The features under [MENU] will allow you access useful information, and also allow you to change many settings.

Functions	**Description**
CHART	Last 24 hours temp recording in a line format.
LOG	Numbers of data recorded.
MIN/MAX	1-point maximum and minimum temp record. Press [RESET] to clear the history.
SUPPORT	Tech Support contact information and QR code link to download manuals.
TEST	Press [TEST] to validate visual, audible, and remote alarm contact alarms are working.
SETTING	Enter password (factory: 0,0,0,0) to change the following settings:
°C/°F	Change the display scale between °C or °F.
HI/LO	Change the high & low temp alarm point.
OFFSET	Change the display readout offset.
TIME	Change the display time zone.
VOLUME	Change the audible alarm volume.
RINGBACK DELAY	Change the audible alarm reminder.
REMOTE DELAY	Change the remote alarm delay.
DOOR DELAY	Change the door alarm delay.
USERS	Change the password code.

CHECK 1-POINT TEMPERATURE HISTORY

Your facility policy may require to record this refrigerator's maximum and minimum temperature point within last 24 hours. Press [MENU] -> [MIN/MAX] to check the 1-point temp history record. Press [RESET] to clear the history.

TECH SUPPORT INFORMATION

The display shows our technical service department contact phone number.

ALARM TEST (VALIDATION)

Your facility may require you to validate the alarm function. This feature will allow you to manually set off visual, audible, and remote alarm, without intentionally warming up the refrigerator. Press [MENU] -> [TEST] to enter the alarm validation. Press [TEST] button. The alarms will be activated for 5 seconds.

CHANGE TEMPERATURE READOUT BETWEEN °C AND °F

You are able to change the display units between °C AND °F. Press [MENU] -> [SETTING] and enter your password, and choose [C/F] to change the temp units. Please note, the logging data will only be available in Celsius format.

CALIBRATION / OFFSET (OFF)

Before making an OFFSET change, please note that this procedure should only be carried out by a certified technician with a NIST traceable calibrated thermometer.

This feature allows a user to change the temperature reading with +/- 5 degree differences.

For example, if a technician's NIST traceable calibrated thermometer is reading 5C, while the display reads 3C, make a +2C change in offset setting.

TIME

This setting allows you to change the time zone on the Real World Time on the main screen. The factory setting is Eastern Time.

VOLUME

This setting allows you to change the audible alarm volume. If this refrigerator is placed in a room filled with other equipment, you may want to turn up the volume in order to be able to hear the audible alarm.

HIGH TEMP ALARM POINT (ALU)

Under this function, you are able to change the high temperature alarm point. Once the refrigerator temperature reaches the set point, the display will show "HIGH TEMP ALARM!" message. Press [MENU] -> [SETTING] and enter your password, and choose [HI/LO] to change the high temp alarm point.

LOW TEMP ALARM POINT (ALL)

Under this function, you are able to change the low temperature alarm point. Once the refrigerator temperature reaches the set point, the display will show "LOW TEMP ALARM!" message. Press [MENU] -> [SETTING] and enter your password, and choose [HI/LO] to change the low temp alarm point.

RING BACK DELAY

Ring back delay is an audible alarm "snooze" feature. You are able to silent the audible alarm for a period of time (ring back delay setting), before the audible alarm returns to remind you the refrigerator's error condition.

REMOTE ALARM DELAY

It is a time delay after the visual and audible alarm being activated. It gives users some time to correct an error, before sending the alarm to the remote monitor system.

For example, the delay is set to be 20 (minutes). A user forgets to close the refrigerator's door, and the temperature warms up to 10C. The High Temp visual and audible alarm will be activated. If the temperature continues to stay above High Temp, 20 minutes later the remote alarm will be activated.

Please note, Remote Alarm will be immediately activated during a power failure event. It would be deactivated when the power resumes and the temperature returns to normal.

REMOTE ALARM SYSTEM (SPST RELAY)

It is recommended to contact your facility manager, or a local technician to assist you in connecting the remote alarm system.

This touch screen display's remote alarm system is wired to be gray and white leads. It is located behind the unit, next to the compressor.

During non-alarm state, the remote alarm system is at CLOSED position (NC). During an alarm state, the system is at OPEN position.

Rating: 3 amps.

DOOR DELAY

This setting allows you to change the door ajar alarm duration. If you set to 1 minute, the DOOR ALARM will be activated once the refrigerator's door is opened for over a minute.

USERS

This setting allows you to change the password to your own. If you forget the password, please contact our Technical Service Department.

4-20mA REMOTE MONITOR

The Touch Screen Display, provides a 4-20 ma current sink on pins 1 (Input) and 2 (Output). The indicating element(s) may be loop-powered as well, as long as the net voltage across the output exceeds 3V d.c. but is less than 90V d.c.

The transmitter may be connected anywhere in the loop. A typical installation would be a 15V supply driving one indicator and the Touch Screen Display. The AP may be connected before or after the indicator in circuit so you can use indicators, whose negative loop connection (loop return) can be at the same potential as their power supply ground if they are not loop-powered.

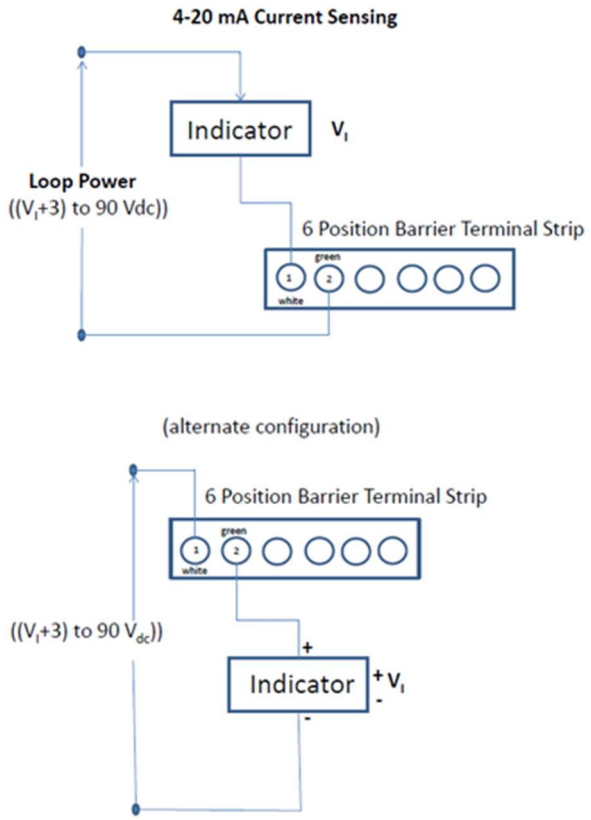

Circuit recommendations.

Resolution:-	0.06mA
Accuracy:-	+/- 2%
Minimum supply voltage	3V + Indicator compliance (VI)
Maximum supply voltage	90V

*The AP board needs a minimum of 3V to operate and this plus the maximum operating voltage (compliance) of the indicator will determine the minimum power supply voltage. For example, if the indicator can take up to 6V, then the minimum power supply voltage will be 3+6 = 9V.

DATA LOGGING

Before starting to use the data logging feature, please take a moment to read through the following instruction.
The logger is programmed to record the temperature every 60 seconds. It can store up to 365 days data. Once the data storage is full, the newest data will overwrite the oldest data.
Computer System Specification: Windows XP, 7, and 10, home or professional edition.

INSTALLATION –

1. Insert the USB drive (included in the package) to your computer. Follow the instruction to install the logging program on your computer. It may take a few minutes to complete the installation. (Default Location: HorizonScientific -> DeviceUtility -> DisplayDevice_Utility.exe)

OPERATION –

2. Connect the USB cable (included in the package) to the display and to your computer.
3. Start the logging program on your desktop shortcut. You should see the logger on the program selection. If not, close out the program and restart it again, and check the USB cable connection.
4. Click [MENU] icon. Select [Retrieve Device Logged Data].

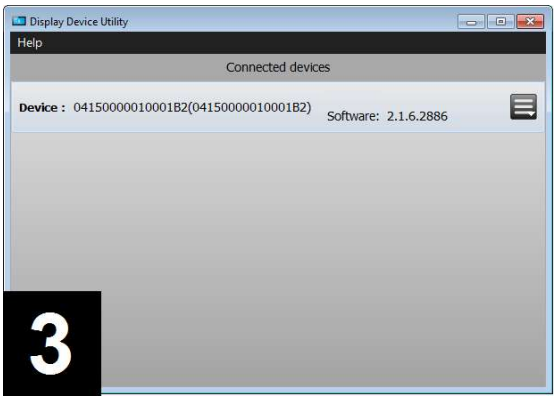

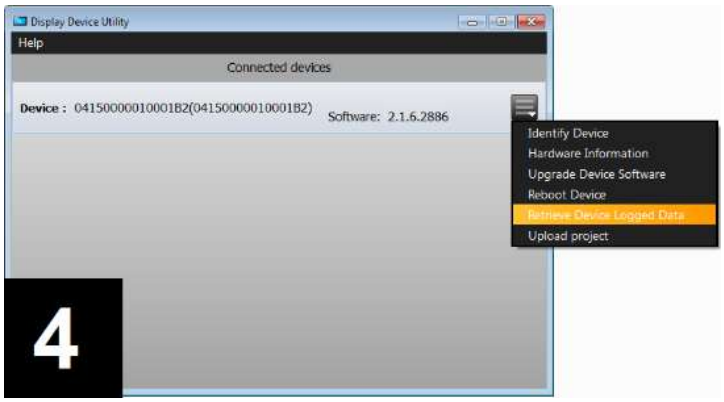

5. The program will automatically retrieve the data from the display. Please note, it may take a moment to download the data. At this moment, you will also see the data is being downloaded from the progress bar on the touch screen display.
6. Once the data is downloaded, a selection window pops up to allow you choose either a) last 24 hours data (log_day), or all data (log_30day). Select the data you would like to download, and select the file folder location to be saved. Press [DOWNLOAD] button to confirm.

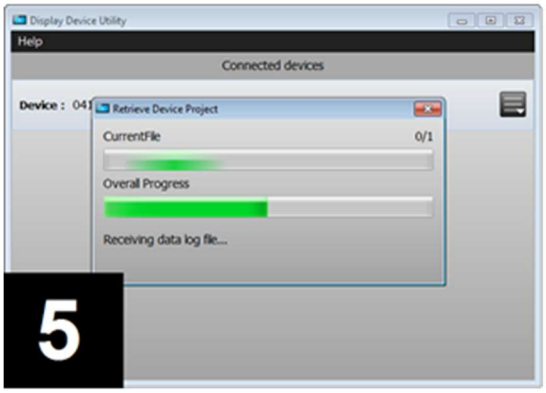

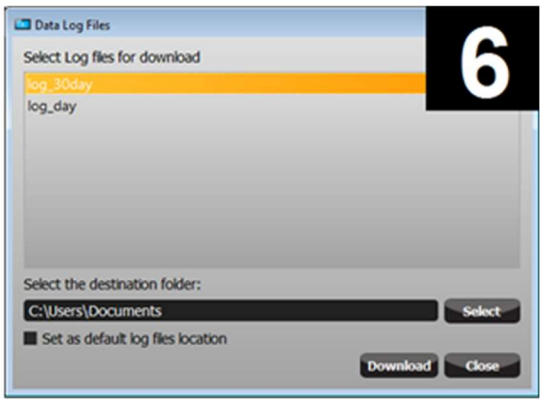

7. Once the data is downloaded into your computer, a window will pop up to ask you to whether keep the data in the display, or delete the data from the display. Please note! Once you select [DELETE FILES], the data will be erased from the display.
8. Press [CLOSE] to exit out the logger program.

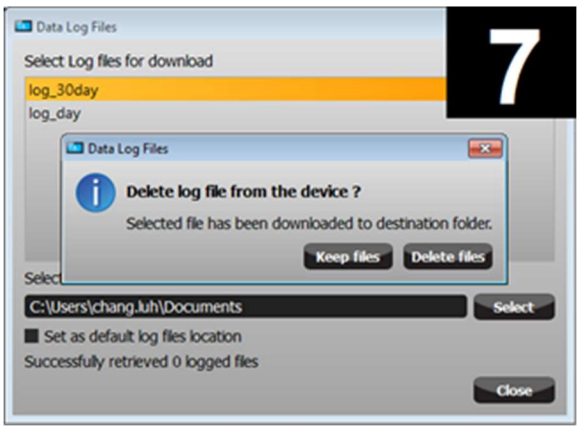

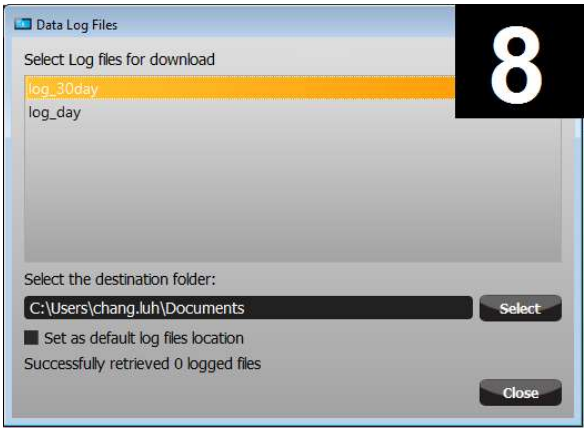

9. The downloaded data is saved as Excel file format. Locate the file in the folder. Open it with Microsoft Excel.

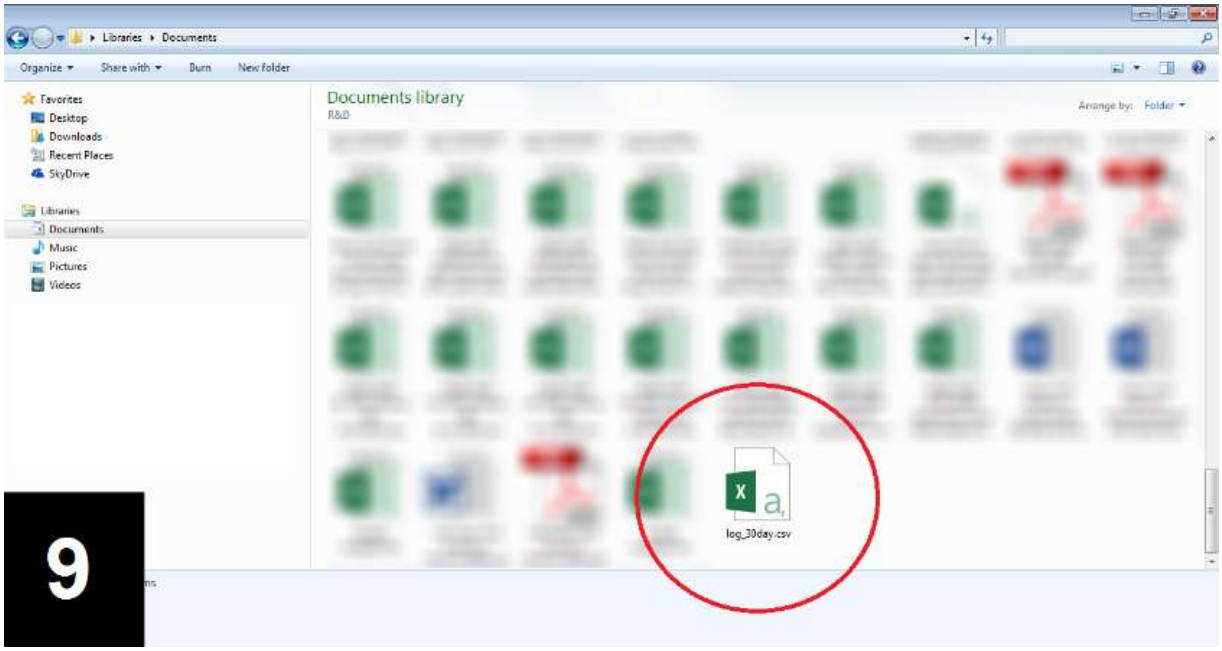

10. Double-click the line between B and C column, in order to extend the B column width. Now you are able to see the entire date and time. You may plot the data into a temp chart via Excel's Chart feature. Please note, the data is saved in Celsius format.

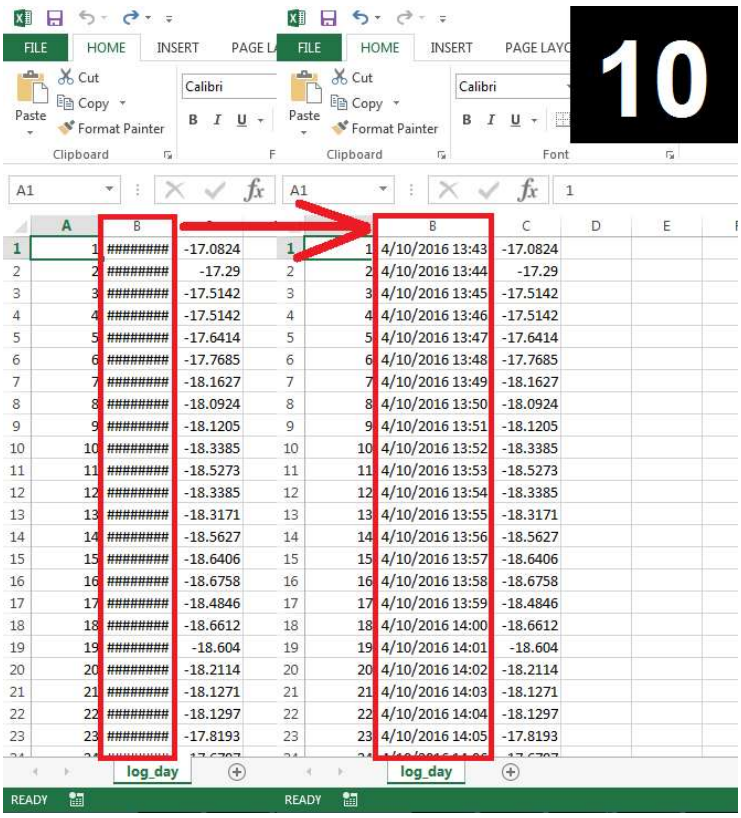

	A	B	C
1	1	########	-17.0824
2	2	########	-17.29
3	3	########	-17.5142
4	4	########	-17.5142
5	5	########	-17.6414
6	6	########	-17.7685
7	7	########	-18.1627
8	8	########	-18.0924
9	9	########	-18.1205
10	10	########	-18.3385
11	11	########	-18.5273
12	12	########	-18.3385
13	13	########	-18.3171
14	14	########	-18.5627
15	15	########	-18.6406
16	16	########	-18.6758
17	17	########	-18.4846
18	18	########	-18.6612
19	19	########	-18.604
20	20	########	-18.2114
21	21	########	-18.1271
22	22	########	-18.1297
23	23	########	-17.8193

	A	B	C
1	1	4/10/2016 13:43	-17.0824
2	2	4/10/2016 13:44	-17.29
3	3	4/10/2016 13:45	-17.5142
4	4	4/10/2016 13:46	-17.5142
5	5	4/10/2016 13:47	-17.6414
6	6	4/10/2016 13:48	-17.7685
7	7	4/10/2016 13:49	-18.1627
8	8	4/10/2016 13:50	-18.0924
9	9	4/10/2016 13:51	-18.1205
10	10	4/10/2016 13:52	-18.3385
11	11	4/10/2016 13:53	-18.5273
12	12	4/10/2016 13:54	-18.3385
13	13	4/10/2016 13:55	-18.3171
14	14	4/10/2016 13:56	-18.5627
15	15	4/10/2016 13:57	-18.6406
16	16	4/10/2016 13:58	-18.6758
17	17	4/10/2016 13:59	-18.4846
18	18	4/10/2016 14:00	-18.6612
19	19	4/10/2016 14:01	-18.604
20	20	4/10/2016 14:02	-18.2114
21	21	4/10/2016 14:03	-18.1271
22	22	4/10/2016 14:04	-18.1297
23	23	4/10/2016 14:05	-17.8193

3.4 OPTIONAL PUSHBUTTON DISPLAY

D-100 temp display and alarm system are specifically designed to display the refrigerator's interior sample temperature and give out alarms if an error occurs.

FEATURES

- Sample temperature display
- Decimal temperature readout
- Battery backup for power failure
- One-point HI and LO temp history
- Temperature calibration (offset)
- °C/°F readout switch
- Bi-color background readout
- Visual Alarm
- Audible Alarm
- Remote Alarm
- High temp alarm
- Low temp alarm
- Power failure alarm
- Sensor error alarm

MAIN SCREEN

During the normal operation, the display shows the interior temperature. The background color will be green.
During an alarm condition, the display toggles between the current interior temperature, and error code. The background color would be flashing red.

ALARM CODE

CODE	DESCRIPTION
HA	High Temperature Alarm
LA	Low Temperature Alarm
SA	Temperature Sensor Failure Alarm
dA	Door Ajar Alarm
PF	Main Power Failure Alarm

BATTERY BACKUP & POWER FAILURE ALARM

The D-100 battery backup will support the alarm system and the temperature display for 8 hours or mor during a power. When the power resumes, the batteries will be automatically recharged.

During a power failure event, the visual display will turn into flashing red background with "PF" (power failure) message. Audible alarm & remote alarm contact would be activated to alert users. The D-100 will still display and monitor the refrigerator temperature during a power failure event until the battery power is depleted.

Once the power resumes, the display will still be flashing red, and showing "PF" message, even if the refrigerator's temperature is normal. It is a feature to alert users that a power failure event has occurred. Users should check the temperature history on the display. To clear the "PF" message, press any button.

CHECK TEMPERATURE HISTORY

Press [UP] button. The display will show the maximum temperature ever reached since the last reset.
Press [DOWN] button. The display will show the minimum temperature ever reached since the last reset.
Press [UP] and [DOWN] button together simultaneously for 4 seconds to clear out the history. The maximum and minimum record will be erased and record the next maximum and minimum temp point.

MENU

Press [MENU] button to enter the user adjustable settings. Press [UP] or [DOWN] to select which setting you would like to make an adjustment.

PARAMETER	DESCRIPTION	FACTORY DEFAULT
ALU	High temp alarm point	0°C or 32°F
ALL	Low temp alarm point	-30°C or -22°F
Ad	Visual & audible alarm delay (minute)	0 (minute)
CF	Celsius & Fahrenheit unit change	°C or °F
dA	Door ajar alarm (minutes)	NO (disable) Door alarm is for selected models only.
rD	Remote alarm delay (minute)	20 (minutes)
Snd	Mute duration (minute)	120 (minutes)
OFF	Temp readout calibration / offset	0

At each setting, press [UP] or [DOWN] to make a change. Then press [MENU] to confirm the new change and move to the next setting.

For example, to change the low temp alarm point: press [MENU] till the display shows [ALL]. Press [UP] to change the factory setting 0C to 1C. Press [MENU] to confirm the setting. And the display will show “Ad” next.

To return to the main display, either cycle through the entire menu from “ALU” to “OFF”, or simply take no action for 30 seconds. The display will return to the temperature display mode.

HIGH TEMP ALARM POINT (ALU)
Under this function, you can change the high temperature alarm point. Once the refrigerator temperature reaches the set point, D-100 will display “HA” message, and send out the audible alarm.

LOW TEMP ALARM POINT (ALL)
Under this function, you can change the low temperature alarm point. Once the refrigerator temperature reaches the set point, D-100 will display “LA” message, and send out the audible alarm.

VISUAL & AUDIBLE ALARM DELAY (Ad)
This function allows users to adjust the time delay between the occurrence of an error and the visual & audible alarm’s activation. For example, if the setting is 1 (minute), when the temp warms above the high temp alarm point, it would take 1 minute before the visual and audible alarm are activated.

We recommend keeping the setting at 0 (minute).

CHANGE TEMPERATURE READOUT BETWEEN °C AND °F
Press [MENU] 4 times till “CF” displays. Press [UP] or [DOWN] to change between °C and °F. The right side °C / °F indicator will toggle according to your selection. Press [MENU] again to confirm your change.

DOOR AJAR ALARM (dA)
This feature is disable on most models (Setting: NO). Only selected models have the door alarm switch installed and feature unlocked. If your refrigerator model does not have the door alarm switch installed, and dA setting is turned on to 0 to 5 (minutes), the display will give out dA (door ajar) alarm even when the door(s) is closed.

If your refrigerator has the door alarm switch(s) installed, you can change the door ajar alarm duration from 0 minute to 5 minutes. If one or more doors is opened out of duration time, the display will activate “dA” message. Once the door is closed, the alarm will be turned off.

MUTE DURATION “RINGBACK” (Snd)

This feature can be considered as a “nudge” alarm. If a user mutes the audible alarm, but an alarm condition persists, the audible alarm will ring back after 120 minutes later (factory setting). This is to prevent a serious alarm condition to be ignored.

CALIBRATION / OFFSET (OFF)

Before making an OFFSET change, please note that this procedure should only be carried out by a certified technician with a NIST traceable calibrated thermometer.

This feature allows a user to change the temperature reading with +/- 10-degree differences.

For example, if a technician’s NIST traceable calibrated thermometer is reading 5C,
while D-100 reads 3C, make a +2C change in OFF setting.

REMOTE ALARM DELAY (rD)

It is a time delay after the visual and audible alarm being activated. It gives users some time to correct an error, before sending the alarm to the remote monitor system.

For example, rD is set to be 20 (minutes). A user forgets to close the refrigerator’s door, and the temperature warms up to 10C. The High Temp (HA) visual and audible alarm will be activated. If the temperature continues to stay above High Temp, 20 minutes later the remote alarm will be activated.

Please note, Remote Alarm will be immediately activated during a power failure event. It would be deactivated when the power resumes and the temperature returns to normal.

REMOTE ALARM SYSTEM (SPST RELAY)

It is recommended to contact your facility manager, or a local technician to assist you in connecting the remote alarm system.

D-100’s remote alarm system is wired to be gray and white leads. It is located at either
1) underneath of top sign canopy, or 2) behind the unit, next to the compressor.

During non-alarm state, the remote alarm system is at CLOSED position (NC). During an alarm state, the system is at OPEN position.

Rating: 3 amps.

3.5 CALIBRATION, VERIFICATION, AND VALIDATION

The display temperatures should be verified on start-up and periodically thereafter to assure that the unit is performing to the requirements. Comparative measurements can be accomplished by utilizing a calibrated Temperature Monitoring Device.

Next place the calibrated Temperature Monitoring Device in a medium that simulates the product being stored (per site verification / validation standards) at the appropriate process temperatures. Allow the medium and thermometer temperature to equalize before comparing the displayed product temperatures and thermometer reading. The displayed Product Temperature should read within ±1°C of the calibrated device. If the displayed Product Temperature is out of range enter an offset in the Product Temperature Calibration screen.

3.6 ALARM FUNCTIONALITY

During normal operation, if an alarm occurs, a visual indicator on the display will show and an audible indicator will sound. Additionally, the remote alarm contact will change state.

For alarms that activate on the temperature controller, the audible alarm can be muted by pressing any button. The visual indicator and remote alarm contact will remain active until the alarm condition is resolved.

For optional displays, silence the audible alarm by pressing the mute button once. The audible alarm will remain muted for the period of time set for the RING BACK. If the alarm is still active after the RING BACK time has expired the audible will sound again.

4. PRODUCT SPECIFICATIONS

4.1 OPERATING STANDARDS

These models are designed to operate under the following conditions:

- Indoor use only
- Maximum altitude: 6562 ft. (2000 m)
- Optimal ambient conditions: 18°C to +26°C (+65°F to +78°F), <70% RH
- Short duration ambient conditions: 15°C to 32°C (59°F to 90°), <80% RH
- Safety tested to 43°C ambient, classified Climatic class 5 (40°C / 40% R.H.) or 7 (35°C / 75% R.H.)

Electrical Specifications:

Model	Input Voltage & Frequency	Voltage Tolerance	Rated Amperage	Power Source	Remote Alarm Maximum Capacity
Refrigerator	115V 60 Hz	± 10%	3.1	Grounded outlet, meeting national electric code (NEC) in the U.S. and all local electrical requirements	230VAC @ 10A, 115VAC @ 10A and 30VDC @ 10A

5. MAINTENANCE

Observe all Warning Labels. Disconnect power to eliminate injury from electrical shock when servicing equipment or cleaning.

Important: It is critical that cleaning recommendations are followed to ensure optimal performance and longevity of the unit.

5.1 INSPECTION AND SERVICING

Periodic inspections (Every 6 months or as required):

- Check the door gasket for proper seal
- Check that ventilation openings inside and outside are not blocked
- Check that proper ventilation is still maintained around the unit

Battery replacement (if equipped)
Controller backup batteries are 12V rechargeable lead acid. If batteries must be replaced, follow the procedure below.

1. Disconnect the main power cord from the wall.
2. Remove the rear cover from the back of the unit at the bottom.
3. Locate the battery held in place with a metal bracket.
4. Disconnect the wiring from the 2 battery terminals, noting the polarity of each connection.
5. Remove the screws holding the metal bracket and lift the bracket away from the battery.
6. Remove the battery and replace with a new battery in the same location and orientation.
7. Reverse the procedure above to restart the unit.

Cleaning
- Never use abrasive cleaners or instruments (steel pads, wire brushes, etc.) on the equipment.
- Warm soapy water is best for cleaning
- If cleaning solution is required, rinse all surfaces the cleaning solution touches with clean water and dry thoroughly.
- Gaskets should be cleaned only with warm soapy water. Cleaning products could damage gaskets or cause them to embrittle over time. Never use tools which could cut or tear the gasket.
- All moving parts have been permanently lubricated and will generally require no maintenance.

Work on systems containing FLAMMABLE REFRIGERANTS
Prior to beginning work on systems containing FLAMMABLE REFRIGERANTS, safety checks are necessary to ensure that the risk of ignition is minimized. For repair to the REFRIGERATING SYSTEM, the following steps shall be completed prior to conducting work on the system.

Work procedure
Work shall be undertaken under a controlled procedure so as to minimize the risk of a flammable gas or vapor being present while the work is being performed.

General work area
All maintenance staff and others working in the local area shall be instructed on the nature of work being carried out. Work in confined spaces shall be avoided.

Checking for presence of refrigerant
The area shall be checked with an appropriate refrigerant detector prior to and during work, to ensure the technician is aware of potentially toxic or flammable atmospheres. Ensure that the leak detection equipment being used is suitable for use with all applicable refrigerants, i.e., non-sparking, adequately sealed, or intrinsically safe.

Presence of fire extinguisher

If any hot work is to be conducted on the refrigerating equipment or any associated parts, appropriate fire extinguishing equipment shall be available on hand. A dry chemical or CO2 fire extinguisher should be adjacent to the charging area.

No ignition sources
No person carrying out work in relation to a REFRIGERATING SYSTEM which involves exposing any pipe work shall use any sources of ignition in such a manner that it may lead to the risk of fire or explosion. All possible ignition sources, including cigarette smoking, should be kept sufficiently far away from the site of installation, repairing, removing and disposal, during which refrigerant can possibly be released to the surrounding space. Prior to work taking place, the area around the equipment shall be surveyed to make sure that there are no flammable hazards or ignition risks. “No Smoking” signs shall be displayed.

Ventilated area
Ensure that the area is in the open or that it is adequately ventilated before breaking into the system or conducting any hot work. A degree of ventilation shall continue during the period that the work is carried out. The ventilation should safely disperse any released refrigerant and preferably expel it externally into the atmosphere.

Checks to the refrigerating equipment
Where electrical components are being changed, they shall be fit for the purpose and to the correct specification. At all times, the manufacturer’s maintenance and service guidelines shall be followed. If in doubt, consult the manufacturer’s technical department for assistance.
The following checks shall be applied to installations using FLAMMABLE REFRIGERANTS:

a. the actual REFRIGERANT CHARGE is in accordance with the room size within which the refrigerant containing parts are installed;
b. the ventilation machinery and outlets are operating adequately and are not obstructed;
c. if an indirect refrigerating circuit is being used, the secondary circuit shall be checked for the presence of refrigerant;
d. marking to the equipment continues to be visible and legible. Markings and signs that are illegible shall be corrected;
e. refrigerating pipe or components are installed in a position where they are unlikely to be exposed to any substance which may corrode refrigerant containing components, unless the components are constructed of materials which are inherently resistant to being corroded or are suitably protected against being so corroded.

Checks to electrical devices
Repair and maintenance to electrical components shall include initial safety checks and component inspection procedures. If a fault exists that could compromise safety, then no electrical supply shall be connected to the circuit until it is satisfactorily dealt with. If the fault cannot be corrected immediately but it is necessary to continue operation, an adequate temporary solution shall be used. This shall be reported to the owner of the equipment, so all parties are advised.
Initial safety checks shall include:

a. that capacitors are discharged: this shall be done in a safe manner to avoid possibility of sparking;
b. that no live electrical components and wiring are exposed while charging, recovering or purging the system;
c. that there is continuity of earth bonding.

Repairs to sealed components
During repairs to sealed components, all electrical supplies shall be disconnected from the equipment being worked upon prior to any removal of sealed covers, etc. If it is absolutely necessary to have an electrical supply to equipment during servicing, then a permanently operating form of leak detection shall be located at the most critical point to warn of a potentially hazardous situation.

Particular attention shall be paid to the following to ensure that by working on electrical components, the casing is not altered in such a way that the level of protection is affected. This shall include damage to cables, excessive number of connections, terminals not made to original specification, damage to seals, incorrect fitting of glands, etc.
Ensure that the apparatus is mounted securely.
Ensure that seals or sealing materials have not degraded to the point that they no longer serve the purpose of preventing the ingress of flammable atmospheres. Replacement parts shall be in accordance with the manufacturer's specifications.

Cabling
Check that cabling will not be subject to wear, corrosion, excessive pressure, vibration, sharp edges, or any other adverse environmental effects. The check shall also take into account the effects of aging or continual vibration from sources such as compressors or fans.

Detection of flammable refrigerants
Under no circumstances shall potential sources of ignition be used in the searching for or detection of refrigerant leaks. A halide torch (or any other detector using a naked flame) shall not be used.
The following leak detection methods are deemed acceptable for all refrigerant systems.
Electronic leak detectors may be used to detect refrigerant leaks but, in the case of FLAMMABLE REFRIGERANTS, the sensitivity might not be adequate, or might need re-calibration. (Detection equipment shall be calibrated in a refrigerant-free area.) Ensure that the detector is not a potential source of ignition and is suitable for the refrigerant used. Leak detection equipment shall be set at a percentage of the LFL of the refrigerant and shall be calibrated to the refrigerant employed, and the appropriate percentage of gas (25 % maximum) is confirmed.
Leak detection fluids are also suitable for use with most refrigerants but the use of detergents containing chlorine shall be avoided as the chlorine can react with the refrigerant and corrode the copper pipe-work.
If a leak is suspected, all naked flames shall be removed/extinguished.
If a leakage of refrigerant is found which requires brazing, all of the refrigerant shall be recovered from the system, or isolated (by means of shut off valves) in a part of the system remote from the leak

Decommissioning
Before carrying out this procedure, it is essential that the technician is completely familiar with the equipment and all its detail. It is recommended good practice that all refrigerants are recovered safely. Prior to the task being carried out, an oil and refrigerant sample shall be taken in case analysis is required prior to re-use of recovered refrigerant. It is essential that electrical power is available before the task is commenced.

a. Become familiar with the equipment and its operation.
b. Isolate the system electrically.
c. Before attempting the procedure, ensure that:
    i. mechanical handling equipment is available, if required, for handling refrigerant cylinders;
    ii. all personal protective equipment is available and being used correctly;
    iii. the recovery process is supervised at all times by a competent person;
    iv. recovery equipment and cylinders conform to the appropriate standards.
d. Pump down refrigerant system, if possible.
e. If a vacuum is not possible, make a manifold so that refrigerant can be removed from various parts of the system.
f. Make sure that cylinder is situated on the scales before recovery takes place.
g. Start the recovery machine and operate in accordance with instructions.

h. Do not overfill cylinders (no more than 80 % volume liquid charge).
i. Do not exceed the maximum working pressure of the cylinder, even temporarily.
j. When the cylinders have been filled correctly and the process completed, make sure that the cylinders and the equipment are removed from site promptly and all isolation valves on the equipment are closed off.
k. Recovered refrigerant shall not be charged into another REFRIGERATING SYSTEM unless it has been cleaned and checked.

Labelling

Equipment shall be labelled stating that it has been de-commissioned and emptied of refrigerant. The label shall be dated and signed. For appliances containing FLAMMABLE REFRIGERANTS, ensure that there are labels on the equipment stating the equipment contains FLAMMABLE REFRIGERANT.

5.2 SERVICE AND ANALYSIS GUIDE

MALFUNCTION		POSSIBLE CAUSE		SOLUTION
Compressor will not start	1.	Service cord unplugged	1.	Plug in service cord
	2.	Overload tripped	2.	Determine reasons and correct
	3.	Control stuck open	3.	Repair or replace
	4.	Wiring incorrect	4.	Check wiring against the diagram
Compressor trips on overload protection	1.	Improperly wired	1.	Check wiring against the diagram
	2.	Low voltage to unit	2.	Determine reason and correct
	3.	Inverter malfunction	3.	Determine reason and replace
	4.	Relay failing to close	4.	Determine reason, correct, or replace
Compressor starts and runs, but short cycles on overload protector	1.	Low voltage to unit	1.	Determine reason and correct
	2.	Overload defective	2.	Check current, replace overload protector
	3.	Excessive head pressure	3.	Check ventilation or restriction in refrigeration system
Inverter malfunction	1.	No Power	1.	Check power / ground wiring
	2.	Frequency input error	2.	Check frequency at CCA
	3.	Improper compressor wiring	3.	Check compressor cable connections
Refrigerated space too warm	1.	Control setting too high	1.	Lower the set point
	2.	Refrigerant overcharge	2.	Reclaim and recharge
	3.	Dirty condenser	3.	Clean condenser
	4.	Evaporator coil iced	4.	Determine reason and defrost
	5.	Not operating	5.	Determine reason, replace if necessary
	6.	Air flow to condenser or evaporator blocked Control	6.	Remove obstruction for free air flow. the control
Standard temperature system and freezes the product	1.	Set point is too low	1.	Raise the set point
	2.	Control points stuck	2.	Replace the controller
Objectionable noise	1.	Fan blade hitting fan shroud	1.	Align fan and shroud or replace components
	2.	Tubing rattle	2.	Locate and reform
	3.	Vibrating fan blade	3.	Replace fan blade
	4.	Condenser fan	4.	Check motor bracket mounting, tighten. If necessary, replace components.
	5.	Worn fan motor bearings	5.	Replace fan motor
Ice buildup	1.	Poor door seal	1.	Repair or replace door gasket
	2.	Drain Line blocked	2.	Remove obstruction, defrost unit
	3.	Drain line frozen	3.	Replace insulation and/or drain heater
	4.	Defrost disabled	4.	Enable Defrost
	5.	Defrost Settings	5.	Adjust defrost termination, drip time, fan delay

6. WARRANTY

Horizon Scientific, Inc. warrants to the original purchaser every new Horizon Scientific, Inc. refrigerated unit, the cabinet, and all parts thereof, to be free from defects in material or workmanship, when such unit is installed, used, and maintained in accordance with provided instructions. The warranty period starts two weeks from the date of shipment from Horizon Scientific, Inc. This two-week period allows ample shipping time so that the warranty will go into effect at approximately the same time your equipment is delivered. Unless subject to prior written agreement with Horizon Scientific, Inc., this warranty does not allow for any warranty start deferment greater than two weeks from date of shipment due to a delayed installation and/or start-up. By purchasing any product from Horizon Scientific, Inc., you, and any entity for which you are purchasing acknowledge and agree to every provision contained herein, and all other Notices and Terms provided to Purchaser by Horizon Scientific, Inc., which are hereby incorporated.

6.1 FACTORY WARRANTY

Under this warranty, Horizon Scientific, Inc., through its authorized service organizations, will repair, or at its option, replace any part found to contain a manufacturing defect in material or workmanship without charge to the owner for parts and service labor. Replacement or repaired parts will be warranted for only the unexpired portion of the original warranty. Horizon Scientific, Inc. will not assume any shipping or cartage costs for parts under warranty. These costs shall be paid by the customer.

6.2 COMPRESSOR WARRANTY

In addition to the standard warranty, Horizon Scientific, Inc. warrants its hermetically and semi-hermetically sealed compressors to be free from defects in both material and workmanship under normal use and service in addition to the standard warranty period. Compressors determined by Horizon Scientific, Inc. to have been defective within this extended time period will, at Horizon Scientific, Inc.'s option, be either repaired or replaced with a compressor or compressor parts of similar design and capacity.

The compressor warranty applies only to hermetically and semi-hermetically sealed parts of the compressor and does not apply to any other parts or components, including, but not limited to, cabinet, paint finish, temperature control, refrigerant, metering device, driers, motor starting equipment, fan assembly or any other electrical components.

Horizon Scientific, Inc.'s sole obligation under this warranty is limited to either repair or replacement of parts, subject to the additional limitations below.

This warranty neither assumes nor authorizes any person to assume obligations other than expressly covered by this warranty.

6.3 ADDITIONAL WARRANTY INFORMATION

NO CONSEQUENTIAL DAMAGES. Horizon Scientific, Inc. is not responsible for economic loss; profit loss; or special, indirect, or consequential damages, including without limitation, losses or damages arising from contents spoilage claims whether because of refrigeration failure, electrical failure, power failure, or compressor failure.

HORIZON SCIENTIFIC, INC.'S MAXIMUM CUMULATIVE LIABILITY RELATIVE TO ALL CLAIMS AND LIABILITIES, INCLUDING OBLIGATIONS UNDER ANY INDEMNITY, WHETHER OR NOT INSURED, SHALL NOT EXCEED THE COST OF THE PRODUCT(S) GIVING RISE TO THE CLAIM OR LIABILITY.

WARRANTY IS NOT TRANSFERABLE. This warranty is not assignable and applies only in favor of the original purchaser/user to whom delivered. Any such assignment or transfer shall void the warranties herein made and shall void all warranties, express or implied, including any warranty of merchantability of fitness for a purpose.

NO IMPLIED WARRANTY OF MERCHANTABILITY OF FITNESS FOR A PARTICULAR PURPOSE. There are no other warranties, express, implied, or statutory, except the standard warranty and the additional compressor warranty as described above. These warranties are exclusive and in lieu of all other warranties, including implied warranty and merchantability of fitness for a purpose. There are no warranties which extend beyond the description on the face hereof, whether based on contract, warranty, tort (including negligence), strict liability, indemnity, or any other legal theory, and whether arising out of warranties, representations, instructions, installations, or non-conformities from any cause. Purchaser further acknowledges that the purchase price of the Product reflects these warranty terms and remedies.

ALTERATION, NEGLECT, ABUSE, MISUSE, ACCIDENT, DAMAGE DURING TRANSIT OR INSTALLATION, FIRE, FLOOD OR OTHER EXTERNAL CAUSES.
Horizon Scientific, Inc. is not responsible for the repair or replacement of any parts that Horizon Scientific, Inc. determines have been subjected after the date of manufacture to alteration, neglect, abuse, misuse, accident, damage during transit or installation, fire, flood, or other external causes. It does not apply to defects resulting from failure to properly install, operate or maintain the product in accordance with the printed instructions provided, or damage caused by the storage of any corrosive material that comes in contact with the interior or exterior portions of the cabinet, or the use of spark producing equipment or containers (such as galvanized or carbonized steel containers) that come in contact with any interior portion of the cabinet.

OUTSIDE U.S./CANADA. This warranty does not apply to, and Horizon Scientific, Inc. is not responsible for, any warranty claims made on products sold or used outside the United States and Canada.

CHOICE OF LAW/VENUE. The laws of the State of South Carolina shall govern the validity, interpretation, and enforcement of this warranty, regardless of conflicts of law principles. Purchaser agrees that proper venue for any action to enforce the terms of this warranty shall be the Dorchester County District Courts, South Carolina. Purchaser submits the jurisdiction of such courts over the Purchaser and the subject matter of any such action. Any action for breach of these warranty provisions must be commenced within one (1) year after that cause of action has accrued.

6.4 WARRANTY CLAIMS

To obtain prompt warranty service, simply contact the manufacturer at 800-648-4041. Horizon Scientific, Inc.'s shipping records showing date of shipment shall be conclusive in establishing the warranty period. All claims should include model number of the unit, the serial number of the cabinet, proof of purchase, date of installation, and all pertinent information supporting the existence of the alleged defect. Any repairs must be authorized by Horizon for the warranty to be honored.

This page is intentionally left blank.

COMPLIANCE

7.1 SAFETY

Safety testing: This unit is safety certified by UL (certified to UL60335-2-89 standard).

7.2 ENVIRONMENTAL

EPA: The refrigerant and foaming agents used in this product EPA SNAP compliant hydrocarbon.

CONTACT US

Technical Support: 1-800-648-4041 x5
Customer Support: 1-800-648-4041 x3
technicalservice@horizonscientific.com